DRAWING FOR CUSTOMER

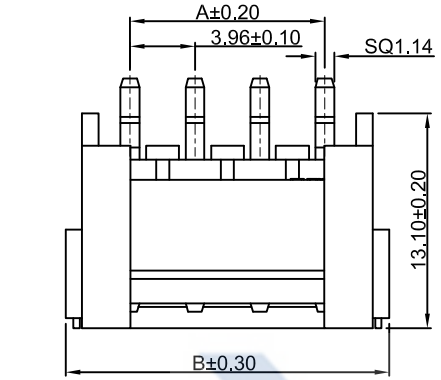

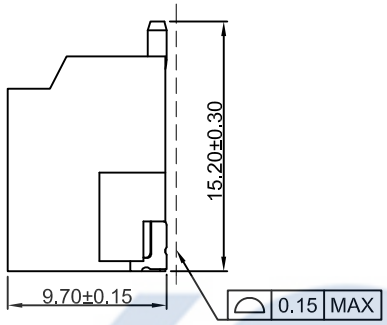

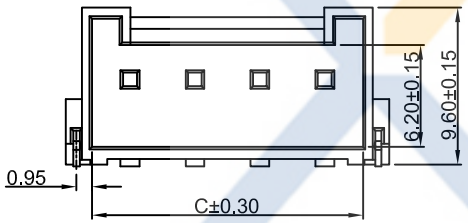

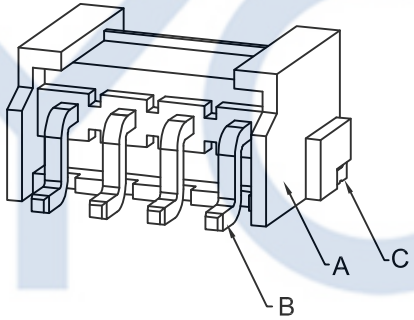

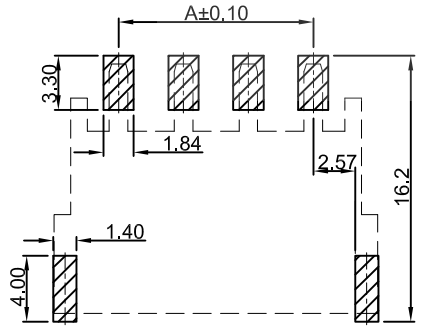

Mating PCB detail

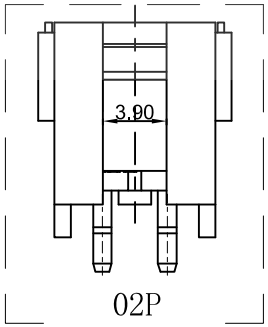

02P

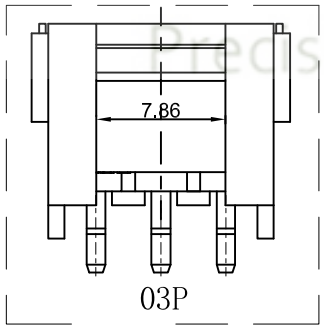

03P

■SPEC.:
- ●Rated Voltage:250V AC,DC
- ●Rated Current:7A AC,DC
- ●Withstand Voltage:1500V AC/minute
- ●Contact Resistance:20mΩ max
- ●Insulation Resistance:1000MΩ min
- ●Temperature Range:-25℃~+105℃

■Material:
- ●Insulator(A):PA9T UL94V-0
  Color:Beige
- ●Contact Pin(B):Brass
  Finish:Tin-plated;over Nickel
- ●Solder Tab(C):Brass
  Finish:Tin-plated;over Nickel

KB962-XX X S R 6 A

- Pin No.
- 包装方式:
  - T:TUBE（管装）
  - R:REEL（卷装）
  - P：PE （袋装）
- S:SMT / D:DIP
- R:Right Angle / V:Vertical
- Mold No.
- Version

Poles	Dimensions(mm)		
	A	B	C
02	3.96	11.88	8.60
03	7.92	15.84	12.56
04	11.88	19.80	16.52
05	15.84	23.76	20.48
06	19.80	27.72	24.44
07	23.76	31.68	28.40
08	27.72	35.64	32.36
09	31.68	39.60	36.32
10	35.64	43.56	40.28

XYCO Precision Connectors

XYCO 东莞市轩业电子科技有限公司
TEL: 0769-8297 9981/2/3 http://www.XYCO.com.cn

DATE 日期	VER 版本	CHANGE HISTORY 變更歷史	CHANGED NAME 修改後料號	DRAWING 變更者
2016-11-18	A		KB962-XXXSR6A	Devin

TOLERANCE 公 差	DRAWING 設計者	Devin	KB962-XXXSR6A
.X=±0.30 .XX=±0.20 .XXX=±0.10	CHECKED 審查	Thomas	PART NO. 料號
	APPROVED 核准	William	DWG NO. 圖號 PE1905020A

UNIT 單位: mm

PRODUCT NAME 產品名稱: VH3.96mm Wire To Board SMT Right Angle Wafer