DRAWING FOR CUSTOMER

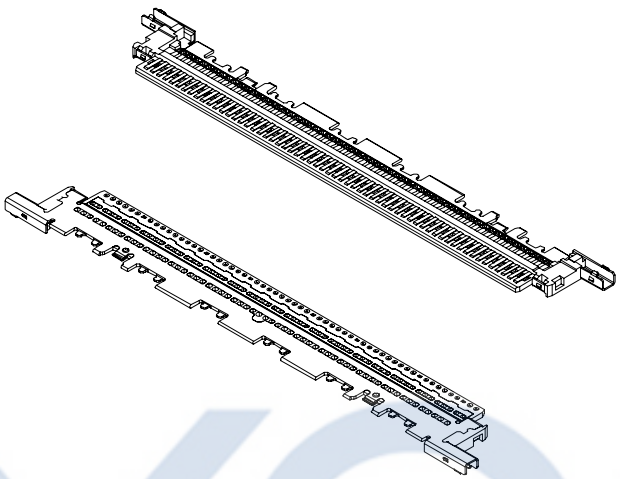

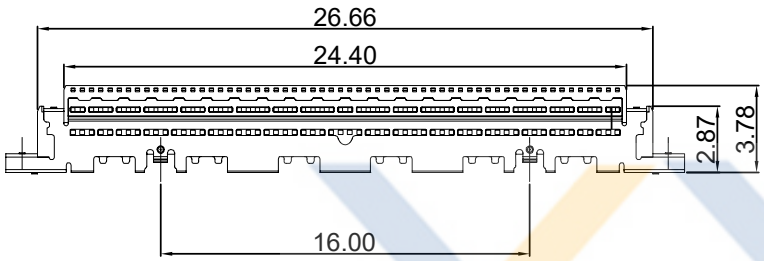

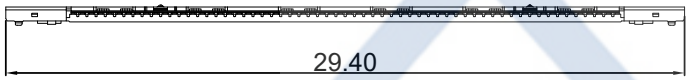

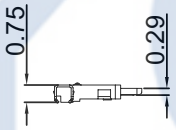

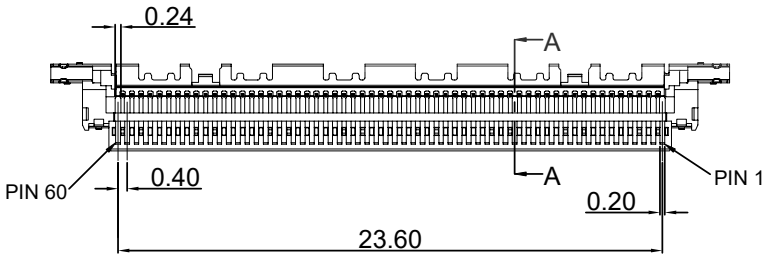

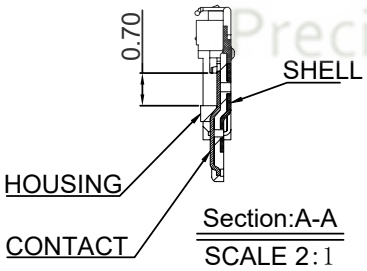

■SPEC.:
- ●Rated Voltage:100V AC,DC
- ●Rated Current:0.8A AC,DC
- ●Withstand Voltage:200V AC/minute
- ●Contact Resistance:50mΩ max
- ●Insulation Resistance:1000MΩ min
- ●Temperature Range:-25℃~+85℃

■Material:
- ●Insulator:LCP UL94V-0,Black
- ●Contact Pin:Phosphor Bronze
  Finish:Gold-plated,over Nickel
- ●Down Shell:Phosphor Bronze
  Finish:Gold-plated ,over Nickel.

KB403-60 H 3 A-R1

- Pin No.
- Housing
- Mold No.
- Version
- Pull ring series

XYCO Precision Connectors

					TOLERANCE 公 差	DRAWING 設計者	Devin	KB403-60H3A-R1		XYCO 东莞市轩业电子科技有限公司 TEL: 0769-8297 9981/2/3 http://www.XYCO.com.cn	
2016-12-08	A		KB403-60H3A-R1	Devin	.X=±0.30 .XX=±0.20 .XXX=±0.10	CHECKED 審查	Thomas	PART NO. 料號		UNIT 單位 mm	PRODUCT NAME 產品名稱 20523 PH0.4mm 60P LVDS Wire To Board Connector Pull Ring Series
DATE 日期	VER 版本	CHANGE HISTORY 變更歷史	CHANGED NAME 修改後料號	DRAWING 變更者		APPROVED 核准	William	DWG NO. 圖號	PE0710A		