DRAWING FOR CUSTOMER

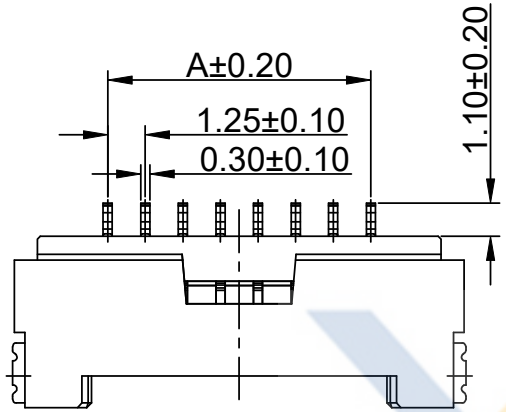

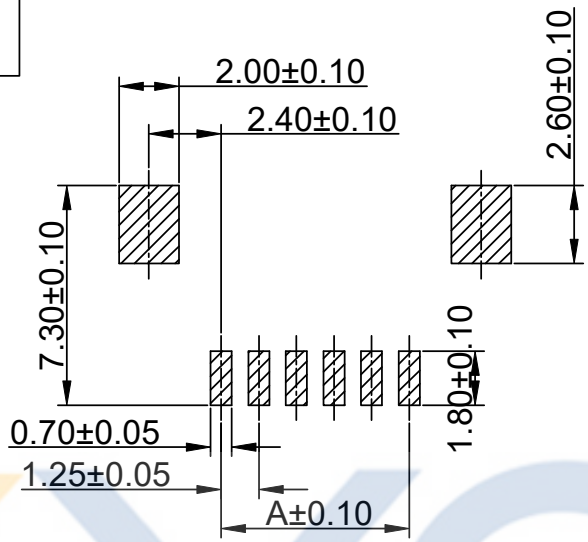

P.C.B LAYOUT

■SPEC.:
- ●Rated Voltage:150V AC,DC
- ●Rated Current:1A AC,DC
- ●Withstand Voltage:500V AC/minute
- ●Contact Resistance:20mΩ max
- ●Insulation Resistance:500MΩ min
- ●Temperature Range:-35℃~+85℃

■Material:
- ●Insulator :PA6T UL94V-0
  Color:NAT-Natural
  BK-Black
- ●Contact Pin :Brass
  Finish:Tin-plated,over Nickel
- ●Solder Tab:Brass
  Finish:Tin-plated,over Nickel

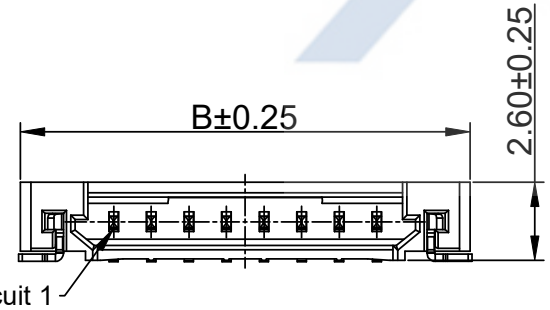

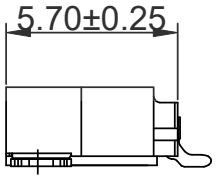

KB912- XX X S L R 5 A- P3 -XX

- Pin No.
- T:TUBE 管装 / R:REEL 卷装 / P:PE 袋装
- S:SMT / D:DIP
- Lock
- R:Right angle / V:Vertical
- Mold No.
- Version
- Material
- Color

Poles	Dimensions(mm)	
	A	B
02	1.25	7.45
03	2.50	8.70
04	3.75	9.95
05	5.00	11.20
06	6.25	12.45
07	7.50	13.70
08	8.75	14.95
09	10.00	16.20
10	11.25	17.45
11	12.50	18.70
12	13.75	19.95
13	15.00	21.20
14	16.25	22.45
15	17.50	23.70
20	23.75	29.95

XYCO Precision Connectors

XYCO 东莞市轩业电子科技有限公司
TEL: 0769-8297 9981/2/3 http://www.XYCO.com.cn

DATE 日期	VER 版本	CHANGE HISTORY 變更歷史	CHANGED NAME 修改後料號	DRAWING 變更者
2015-06-16	A		KB912-XXXSLR5A-P3-XX	Devin

TOLERANCE 公 差	.X=±0.30 .XX=±0.20 .XXX=±0.10	DRAWING 設計者	Devin
		CHECKED 審查	Thomas
		APPROVED 核准	William

KB912-XXXSLR5A-P3-XX			
PART NO. 料號		UNIT 單位	mm
DWG NO. 圖號	PE1808005A		

PRODUCT NAME 產品名稱	DF14 PH1.25mm Wire To Board SMT Right Angle Wafer With Lock