DRAWING FOR CUSTOMER

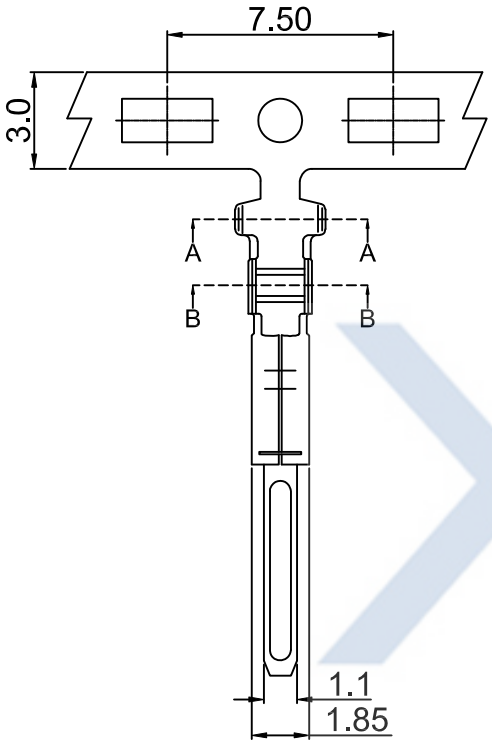

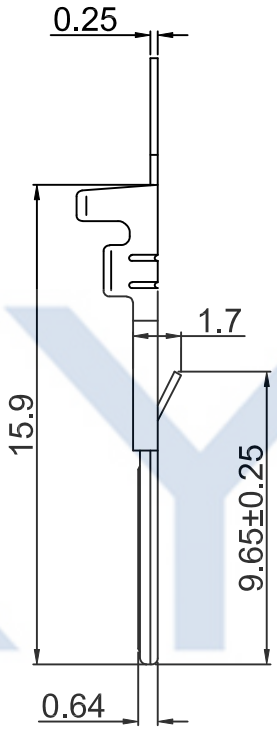

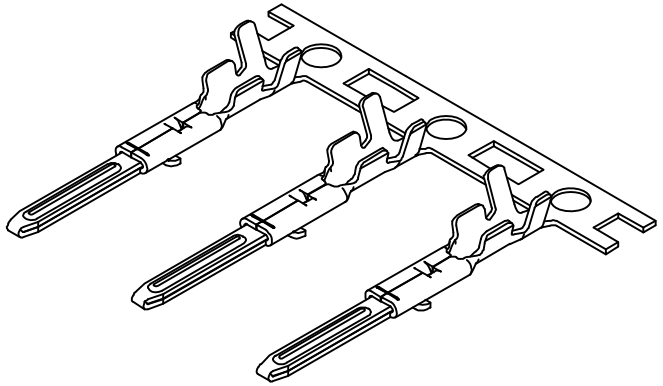

■SPEC.:
- ●Rated Voltage:250V AC,DC
- ●Rated Current:3A AC,DC
- ●Withstand Voltage:1500V AC/minute
- ●Contact Resistance:10mΩ max
- ●Insulation Resistance:500MΩ min
- ●Temperature Range:-25℃~+85℃

■Terminal:
- ●Material:Phosphor Bronze
- ●Finish:Tin-plated,over Nickel
- ●Applicable wire:AWG#22~28
- ●QTY.:8KPCS/Reel

XYCO Precision Connectors

KB942 X X T 3 A

- 1:All plated
- 2:Half plated
- Plating
  - 0:Tin-plated
  - 1:Gold Flash
  - 2:Gold Plat 3u"
  - 3:Gold Plat 5u"
- Terminal
- Mold No.
- Version

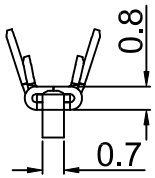

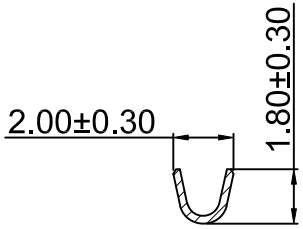

Section:B-B

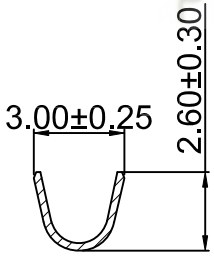

Section:A-A

					TOLERANCE 公 差	DRAWING 設計者	Devin	KB942-XXT3A		XYCO 东莞市轩业电子科技有限公司 TEL: 0769-8297 9981/2/3 http://www.XYCO.com.cn			
2013-09-13	A		KB942-XXT3A	Devin	.X=±0.30 .XX=±0.20 .XXX=±0.10	CHECKED 審查	Thomas	PART NO. 料號		UNIT 單位	mm	PRODUCT NAME 產品名稱	SM-AT PH2.5mm Wire To Wire Terminal-Male
DATE 日期	VER 版本	CHANGE HISTORY 變更歷史	CHANGED NAME 修改後料號	DRAWING 變更者		APPROVED 核准	William	DWG NO. 圖號	PE2504A				