DRAWING FOR CUSTOMER

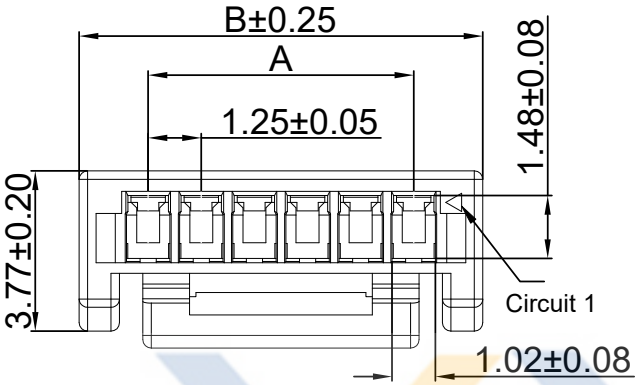

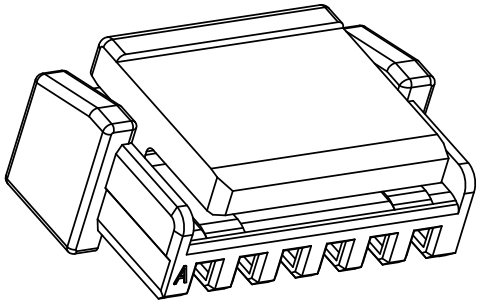

■SPEC.:
- Voltage Rating:50V AC/DC
- Current Rating:1.5A AC/DC
- Dielectric Strength :500V AC/minute
- Contact Resistance:20mΩ max
- Insulation Resistance:100MΩ min
- Temperature Range:-25°C ~+85°C

■Material:
- Insulator:B1-PA66 UL94V-0;
  NB1-PA66 UL94V-0 HF.
  Color:WH-White
  BK-Black

XY12501- XX H L 2 A - XX- BK

- Pin No.
- Housing
- Lock
- Mold No.
- Version
- Material
- Color

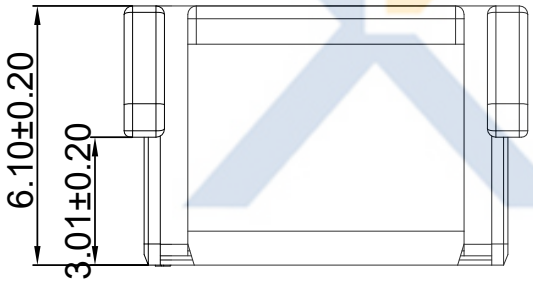

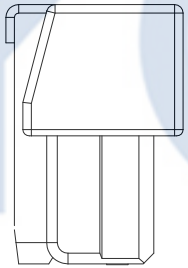

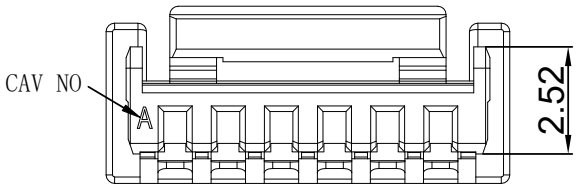

Poles	Dimensions (mm)	
	A	B
02	1.25	4.50
03	2.50	5.75
04	3.75	7.00
05	5.00	8.25
06	6.25	9.50
07	7.50	10.75
08	8.75	12.00
09	10.00	13.25
10	11.25	14.50
11	12.50	15.75
12	13.75	17.00
13	15.00	18.25
14	16.25	19.50
15	17.50	20.75
16	18.75	22.00

XYCO Precision Connectors

XYCO 东莞市轩业电子科技有限公司
TEL: 0769-8297 9981/2/3 http://www.XYCO.com.cn

DATE 日期	VER 版本	CHANGE HISTORY 變更歷史	CHANGED NAME 修改後料號	DRAWING 變更者
2021-05-16	A		XY12501-XXHL2A-XX-BK	Devin

TOLERANCE 公 差	DRAWING 設計者	Devin	XY12501-XXHL2A-XX-BK
.X=±0.30 .XX=±0.20 .XXX=±0.10	CHECKED 審查	Thomas	PART NO. 料號
	APPROVED 核准	William	DWG NO. 圖號 PE210501A

UNIT 單位: mm

PRODUCT NAME 產品名稱: 505565 PH1.25mm Wire To Board Housing With Lock