DRAWING FOR CUSTOMER

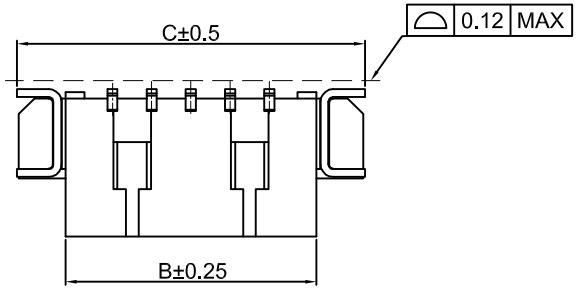

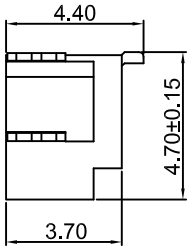

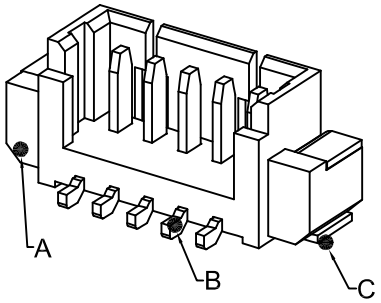

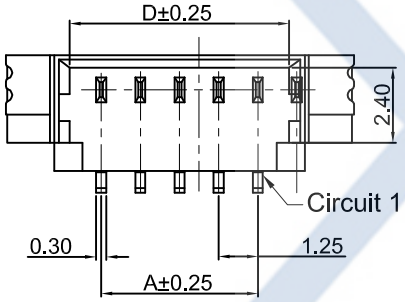

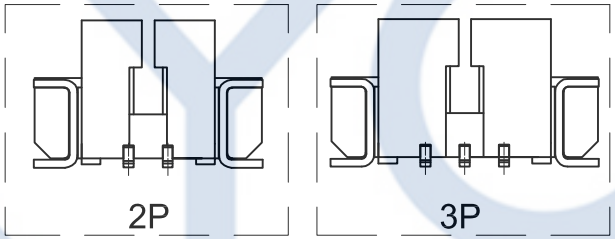

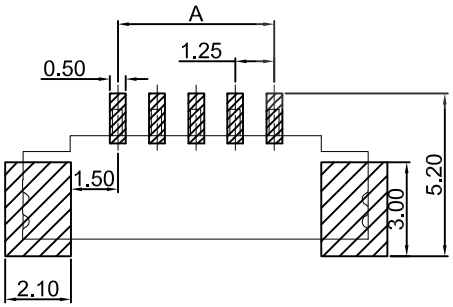

SUGGESTED PCB LAYOUT

KB915-XX X S V 6 A

- Pin No.
- T:TUBE（管装）
- R:REEL（卷装）
- P:P E （袋装）
- D:DIP
- S: SMT
- R:Right Angle
- V:Vertical
- Mold No.
- Version

■SPEC.:
- ●Rated Voltage:125V AC,DC
- ●Rated Current:1A AC,DC
- ●Withstand Voltage:500V AC/minute
- ●Contact Resistance:20mΩ max
- ●Insulation Resistance:100MΩ min
- ●Temperature Range:-25℃~+85℃

■Material
- ●Insulator(A):LCP UL94V-0
- ●Contact(B):Phosphor Bronze
  Finish:Tin-Plated,over Nickel
- ●Solder Tab(C):Brass
  Finish:Tin-Plated,over Nickel

Poles	Dimensions(mm)			
	A	B	C	D
02	1.25	4.25	7.75	3.20
03	2.50	5.50	9.00	4.45
04	3.75	6.75	10.25	5.70
05	5.00	8.00	11.50	6.95
06	6.25	9.25	12.75	8.20
07	7.50	10.50	14.00	9.45
08	8.75	11.75	15.25	10.70
09	10.00	13.00	16.50	11.95
10	11.25	14.25	17.75	13.20
11	12.50	15.50	19.00	14.45
12	13.75	16.75	20.25	15.70
13	15.00	18.00	21.50	16.95
14	16.25	19.25	22.75	18.20
15	17.50	20.50	24.00	19.45
16	18.75	21.75	25.25	20.70

XYCO Connectors

XYCO 东莞市轩业电子科技有限公司
TEL: 0769-8297 9981/2/3 http://www.XYCO.com.cn

DATE 日期	VER 版本	CHANGE HISTORY 變更歷史	CHANGED NAME 修改後料號	DRAWING 變更者
2013-09-20	A		KB915-XXXSV6A	Devin

TOLERANCE 公 差	DRAWING 設計者	Devin	KB915-XXXSV6A		UNIT 單位	mm	PRODUCT NAME 產品名稱	53398 PH1.25mm Wire To Board SMT Vertical Wafer
.X=±0.30 .XX=±0.20 .XXX=±0.10	CHECKED 審查	Thomas	PART NO. 料號					
	APPROVED 核准	William	DWG NO. 圖號	PE3107A				