# DRAWING FOR CUSTOMER

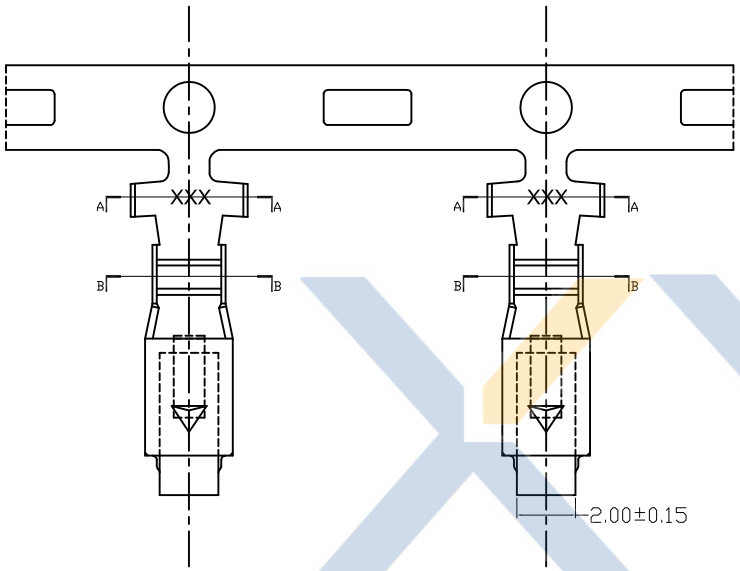


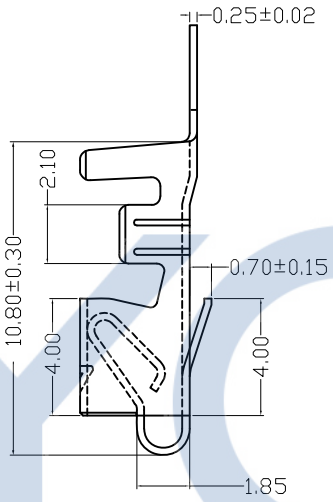


■ TERMINAL

- Material:Phosphor Bronze
- Finish : Tin-plated
- Thickness:0.25mm
- Wire Range:18AWG-22AWG

KB962- X X T 3 A

- Version
- Mold No.
- Terminal
- Plating
  - 1: All plated
  - 2: Half plated
- 0: Tin-plat
- 1: Gold Plat1u"
- 2: Gold Plat3u"
- 3: Gold Plat5u"

Precision Connectors

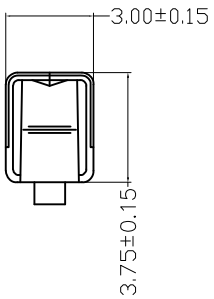


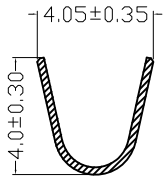


SECTION A-A

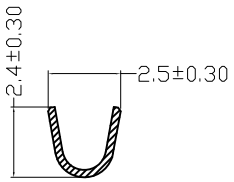


SECTION B-B

| | | | | | | | | | | | |
|---|---|---|---|---|---|---|---|---|---|---|---|
| | | | | TOLERANCE 公 差 | DRAWING 设计者 | John | KB962-XXT3A | | XYCO PRECISION CONNECTORS TEL: 0769-8297 9981/2/3 http://www.XYCO.com.cn | | |
| 2013-07-30 | A | | John | .X=±0.30 .XX=±0.20 .XXX=±0.10 | CHECKED 审查 | Thomas | PART NO. 料号 | | UNIT 单位 | mm | PRODUCT NAME 产品名称 | VH3.96 TER |
| DATE 日期 | VER 版本 | CHANGE HISTORY 变更历史 | DRAWING 变更者 | | APPROVED 核准 | William | DWG NO. 图号 | KB962T001 | | | |